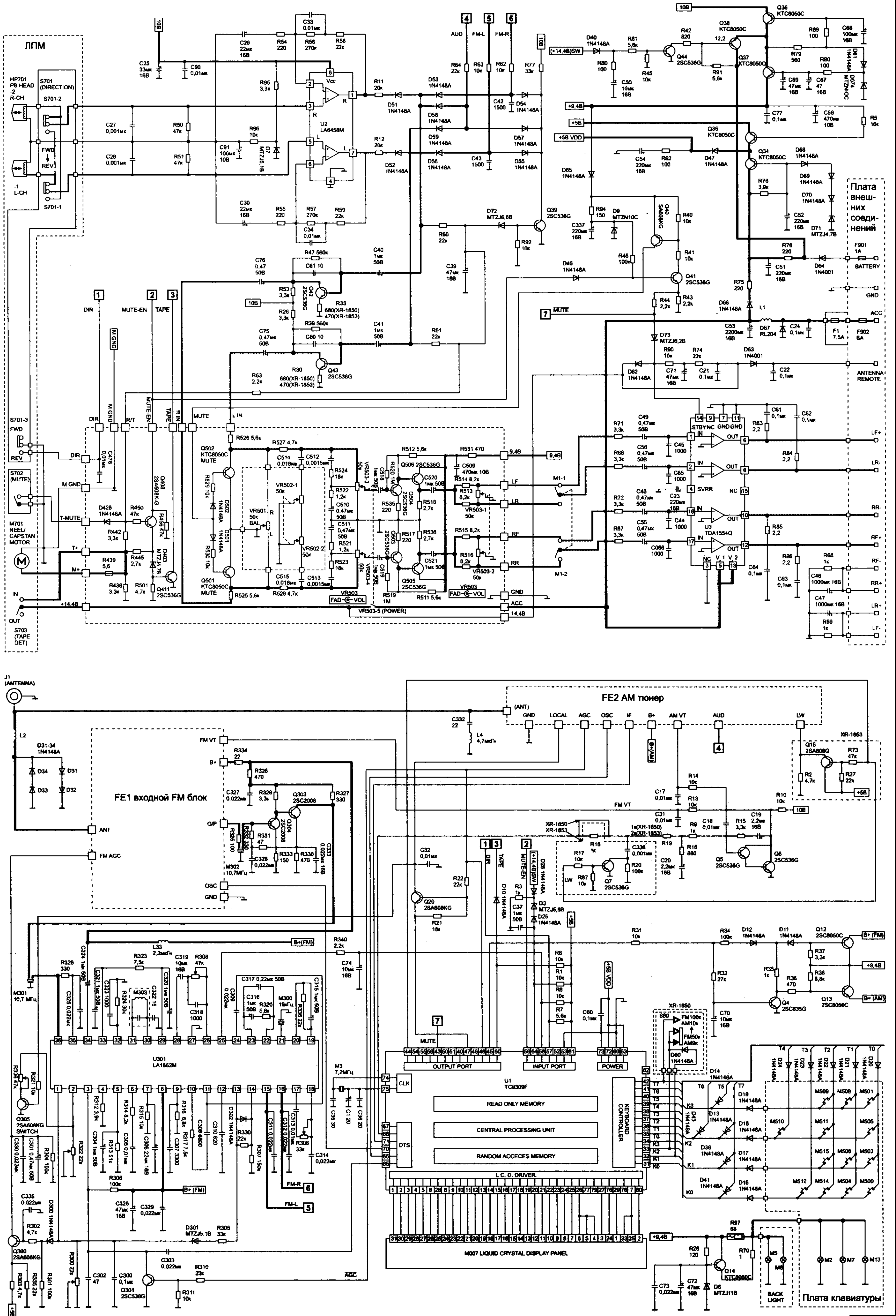
ЛПМ
HP701 PB HEAD -2 R-CH
-1 L-CH
S701 (DIRECTION)
S701-2
S701-1
FWD
REV
U2 LA6458M
Q39 2SC536G
Q40 2SA608KG
Q41 2SC536G
Q42 2SC536G
Q43 2SC536G
Q44 2SC536G
Q34 KTC8050C
Q35 KTC8050C
Q36 KTC8050C
Q37 KTC8050C
Q38 KTC8050C
AUD
FM-L
FM-R
10В
(+14,4В)SW
+9,4В
+5В
+5В VDD
MUTE
DIR
MUTE-EN
TAPE
M GND
R/T
R IN
L IN
S701-3 FWD REV
S702 (MUTE)
M701 REEL/CAPSTAN MOTOR
S703 (TAPE DET)
T-MUTE
T+
M+
IN
OUT
+14,4В
Q408 2SA608KG
Q411 2SC536G
Q501 KTC8050C MUTE
Q502 KTC8050C MUTE
VR501 50к BAL
VR502-1 50к
VR502-2 50к
VR503-1 50к
VR503-2 50к
VR503-3 50к
VR503-4 50к
VR503 FAD-VOL
VR503-5 (POWER)
Q503 2SC536G
Q504 2SC536G
Q505 2SC536G
Q506 2SC536G
9,4В
LF
LR
RF
RR
GND
ACC
14,4В
M1-1
M1-2
U3 TDA1554Q
STBY
NC
GND
SVRR
IN
OUT
Плата внешних соединений
F901 1A
BATTERY
GND
ACC
F1 7,5A
F902 6A
ANTENNA REMOTE
LF+
LR-
RR-
RF+
RF-
RR+
LR+
LF-
J1 (ANTENNA)
L2
D31-34 1N4148A
FE1 входной FM блок
FM VT
B+
O/P
OSC
GND
ANT
FM AGC
Q303 2SC2008
Q304 2SC2008
M302 10,7МГц
FE2 AM тюнер
(ANT)
LOCAL
AGC
OSC
IF
B+
AM VT
AUD
LW
B+(AM)
XR-1853
Q16 2SA608G
XR-1850
XR-1853
Q5 2SC536G
Q6 2SC536G
Q7 2SC536G
M301 10,7 МГц
U301 LA1862M
Q305 2SA608KG SWITCH
Q300 2SA608KG
Q301 2SC536G
B+(FM)
FM-R
FM-L
AGC
Q20 2SA608KG
M3 7,2МГц
CLK
DTS
U1 TC9309F
OUTPUT PORT
INPUT PORT
POWER
READ ONLY MEMORY
CENTRAL PROCESSING UNIT
RANDOM ACCECES MEMORY
KEYBOARD CONTROLLER
L. C. D. DRIVER
M007 LIQUID CRYSTAL DISPLAY PANEL
XR-1850
S80
FM100к
AM10к
FM50к
AM9к
Q12 2SC8050C
Q13 2SC8050C
Q4 2SC835G
B+ (FM)
+9,4В
B+ (AM)
T0 T1 T2 T3 T4 T5 T6 T7
K0 K1 K2 K3
R0
Q14 KTC8050C
D6 MTZJ11B
BACK LIGHT
Плата клавиатуры
M5
M6
M2
M7
M13

UA0FKI